VTA/VTR to New VTR
Conversion Chart

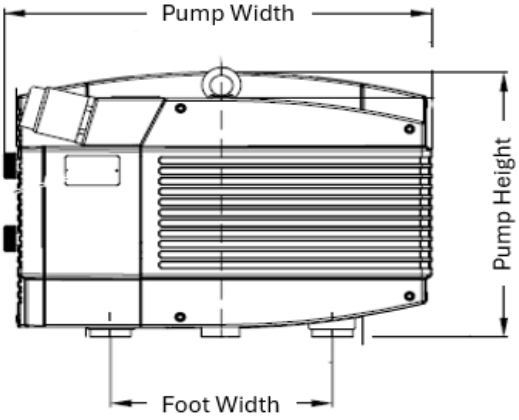

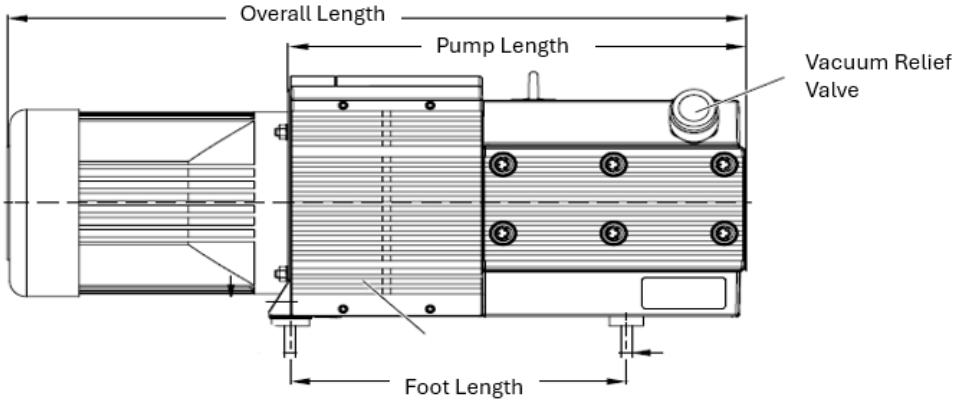

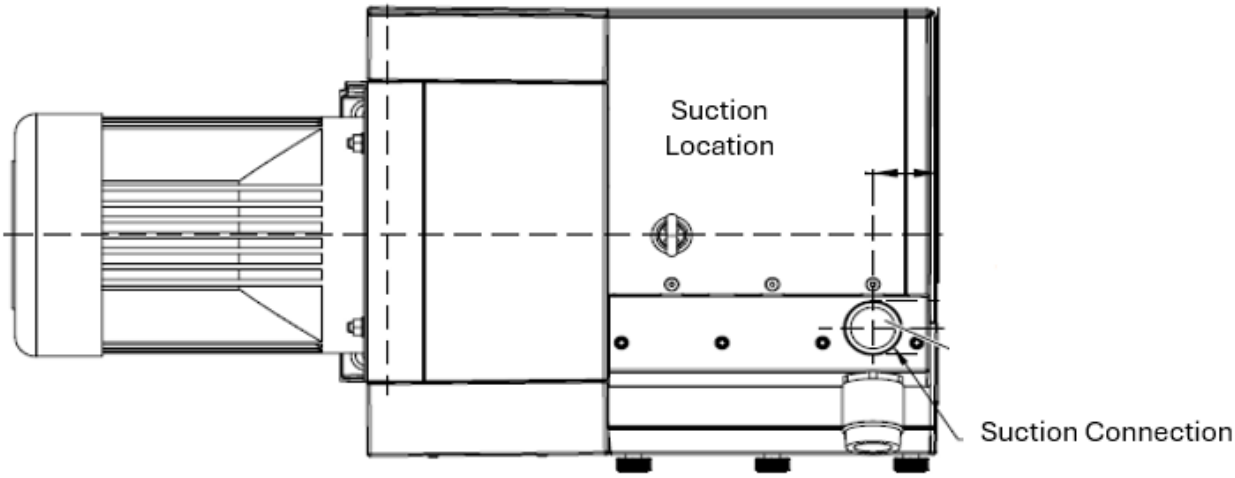

Dimension	Old				New			
	VTA		**VTR**		**VTR**			
	60	80	100	140	61	81	101	141
Overall Length (in)	31.23	32.59	35.64	37.69	27.72	27.72	33.19	32.64
Pump Length (in)	18.66	18.66	21.62	22.13	16.34	16.34	21.22	21.22
Pump Width (in)	15.28	15.28	15.98	15.98	13.90	13.90	18.50	18.50
Pump Height (in)	12.60	12.60	14.49	14.49	12.91	12.91	12.99	12.99
Foot Length (in)	15.75	15.75	15.75	15.75	12.83	12.83	15.67	15.67
Foot Width (in)	8.27	8.27	8.27	8.27	7.48	7.48	9.65	9.65
Suction Location (in)	8.74	8.74	2.05	2.05	1.81	1.81	2.36	2.36
Suction Size	1" NPT	1" NPT	1-1/4" NPT	1-1/4" NPT	1" NPT	1" NPT	1-1/2" NPT	1-1/2" NPT